Sliding Jamb Option

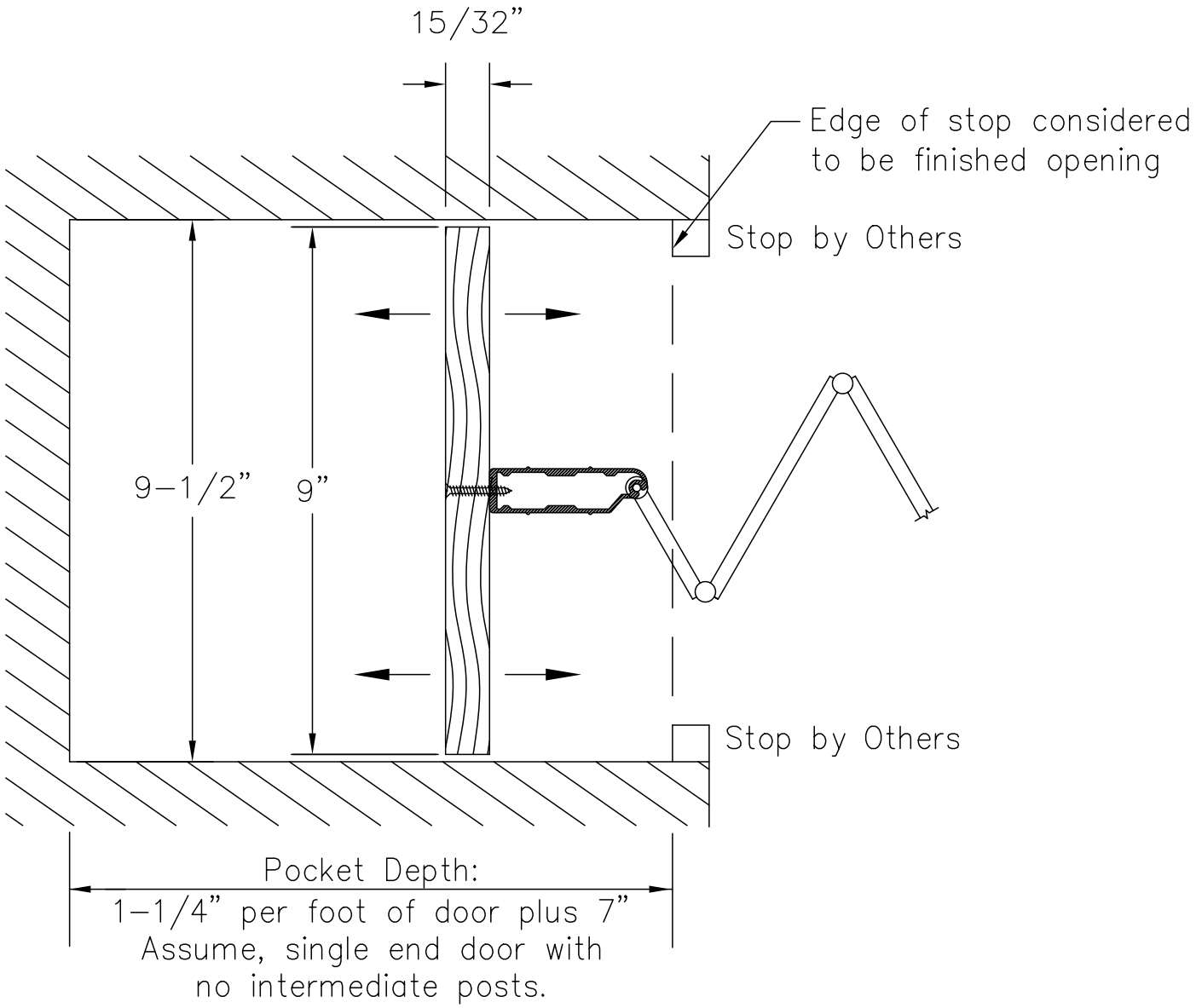

Woodfold Manufacturing, Inc.
PO Box 346 Forest Grove OR 97116
http://www.woodfold.com

CAD SJO-240

SLIDING JAMB OPTIONS – MODEL 240